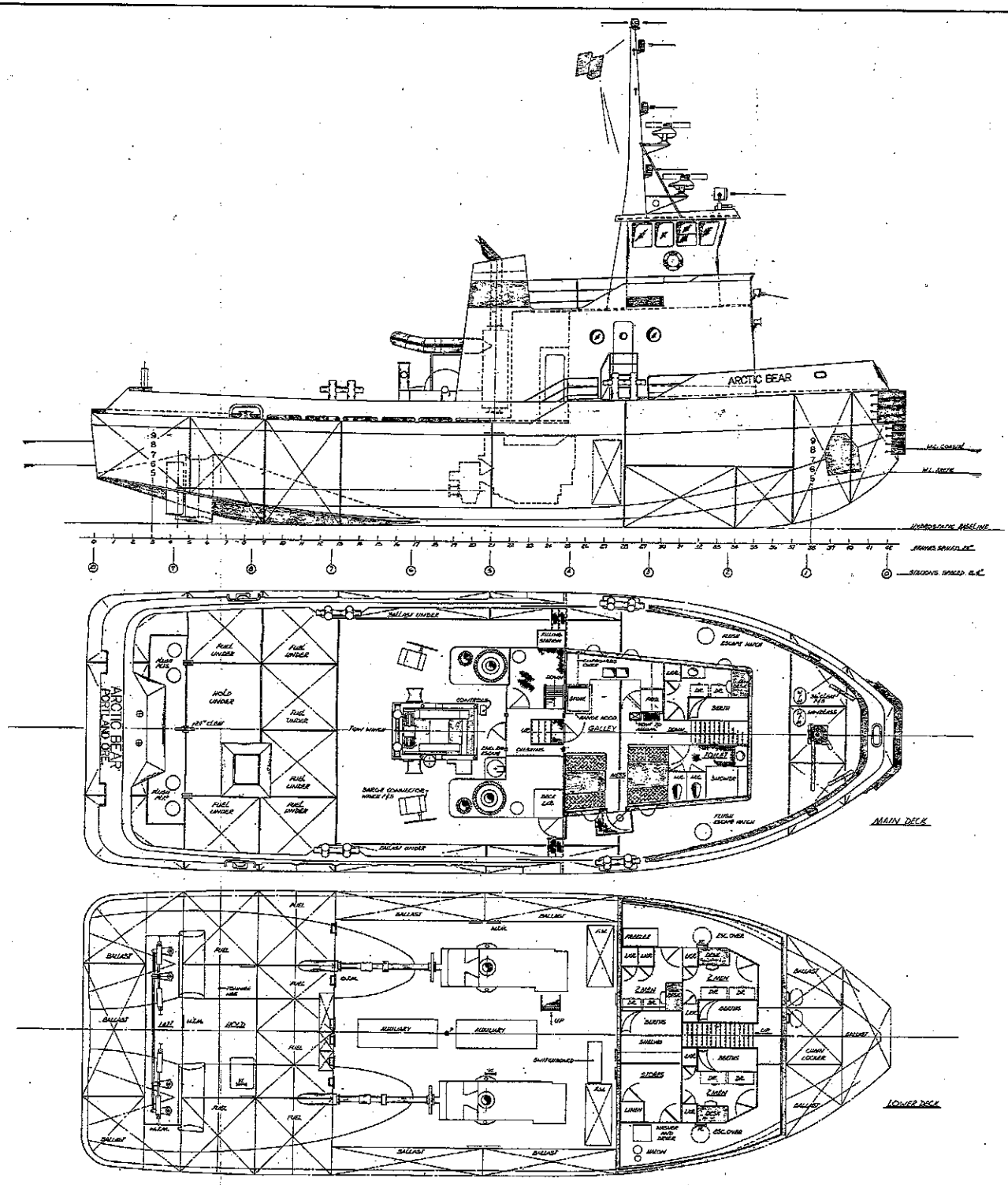

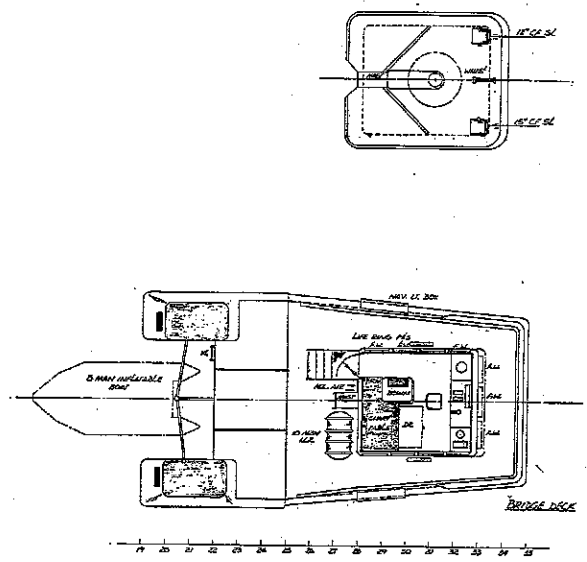

PRINCIPAL PARTICULARS:

LENGTH OVERALL	86'-6" (EXCLUDING FENDERS)
LENGTH M.L. (ARCTIC)	86'-0"
BEAM, MOULDED	30'-0"
DEPTH, MOULDED	11'-0"
DRAFT, ARCTIC	6'-0"
DRAFT, COASTAL	8'-6"
CREW	MASTER, ENG. + 3 (ARCTIC)
POWER	TWIN CAT. D398 TA (1700 BHP)
FUEL CAPACITY	31,950 GALS.
FRESH WATER CAPACITY	1700 GALS.
BALLAST CAPACITY	148 L. TONS
CLASSIFICATION	A.B.S. ICE CLASS "A" "TOWING SERVICE"

No.	REVISION	DATE
D	REDRAWN TO AS FITTED CONDITION	16-12-84
C	GENERAL REVISIONS	29-8-84
B	GENERAL MINOR CORRECTIONS AND ADDITIONS	30-5-80
A	GENERAL MINOR CORRECTIONS	8-2-80

APPROVED	DATE	APPROVED	DATE

PROJECT: 84' TWIN SCREW TUG

OWNER:

TITLE: GENERAL ARRANGEMENT AS FITTED

DRAWN: RAY CRANE
SCALE: 1/8" = 1'-0"
DATE: DECEMBER 16, 1981

DRAWING NO. - 211-1

REV. D

PETER S. HATFIELD LTD.